myRobot® CENTER

The expert for robots in your home

With one click to the online shop

myRobotcenter.eu

myRobotcenter.co.uk

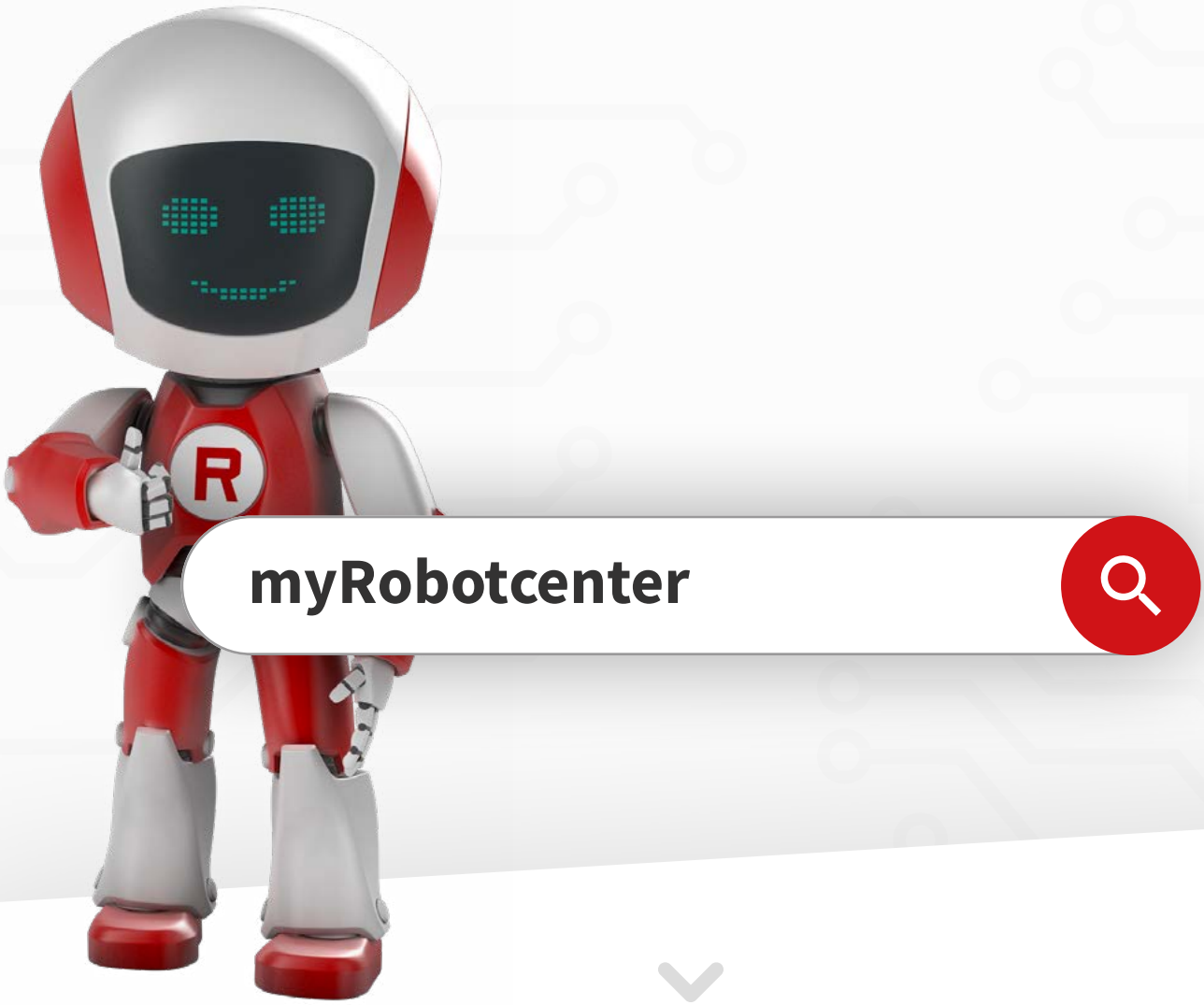

Ver 1.0

MBOT

User manual

MBOT 500

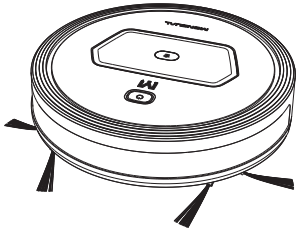

MONEUAL®

Contents

Before use	Important Instructions	03
	Package content	05
	Product description	06
Installation instructions	Charging station	07
	Installing the remote control	08
	Charging the device	09
Product operation	Instructions before operation	10
	Remote control & functions	11
	Start cleaning	12
	End cleaning	13
Care and maintenance	Cleaning the dust bin	14
	Cleaning the dust filter	15
	Cleaning the sensors and wheels	16
	Cleaning the main brush	17
	Cleaning the side brushes	18
	Storage/Battery change	18
	Cleaning the charging contact	19
Customer service	Troubleshooting	20
	Technical specifications	21

Thank you for deciding to purchase this MONEUAL MBOT robot vacuum cleaner. Before using the product, please read this user manual carefully and keep it for future reference.

Depending on the model, some content of this user manual may vary from the actual product. The contents of this manual are subject to change without notice.

Copyright

All rights reserved.

Published on 1 February 2019

MONEUAL is a brand/a registered trademark of MTG GmbH in Europe and/or other countries.

The publication is protected by copyright and all rights are reserved. No part may be copied or communicated in any form without prior written approval from MONEUAL.

Depending on your model and type of device, some content in this manual may vary.

MTG GmbH takes no responsibility for any technical or text-related errors, omissions or any incidental or consequential damages or malfunctions of the equipment resulting from failure to comply with the safety and user instructions.

MTG GmbH takes no responsibility for damage caused by not using the device according to the instructions.

Important Instructions

Warning You may be killed or seriously injured if you do not follow this instruction.

Caution You may be injured or your appliance may be damaged if you do not follow this instruction.

Note Important information, definitions, general rules and notes are explained.

Warning: Please read and follow the instructions in the manual to ensure your safety and the safe use of your robot cleaner. In case of disregard, there is no liability for personal injury and property damage. Warranty is valid only if you follow the instructions.

Keep away from abysses and do not use on elevated objects such as tables, etc.. To prevent your device from falling, place an obstacle in front of the abyss.

When using the device, ensure that you are within reach of the device, so that you can intervene and relocate the device.

This appliance can be used by children aged 8 years and above, same as persons with reduced physical, sensory or mental capabilities or lack of experience and knowledge if they have been given supervision or instruction concerning the use of this appliance in a safe way and understand the hazards involved.

Children shall not play with the appliance. Cleaning and user maintenance shall not be made by children without supervision.

WARNING: For the purposes of recharging the battery, only use the detachable supply unit provided with this appliance. The battery must be removed from the appliance before it is scrapped. The appliance must be disconnected from the supplymains when removing the battery. The battery must be disposed of in accordance with local regulations.

If the dust bin is full, the cleaning performance will be reduced.
Empty the dust bin after each use (see page 14).

Please clean the cliff sensors and wheels regulary (see page 16).

Be careful not to break the robot cleaner when you pull it out of the box.

Install the side brushes.

The device must be fully charged before first use.

Remove any obstacles on the floor before you start cleaning mode.

The robot cleaner can not climb thresholds higher than 10mm.

After charging is complete, keep the robot cleaner docked to the charging station.
The robot will turn off automatically.

Install the charging station in a location that can be easily accessed by the robot cleaner (1m distance to each side).

⚠ Only use the original adapter, battery and the original charging station to prevent damage to the device as well as electric shocks, surges and/or fire.

⚠ If damage occurs to the device or accessories, discontinue use of the robot and contact customer service. Never perform any repairs yourself.

⚠ Never operate the device and any accessories with wet hands.

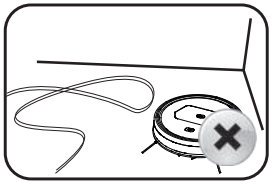

Before cleaning, remove any cables and loose objects to avoid the device malfunctioning.

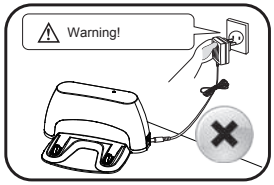

If the device is not used for several weeks, unplug the power cable to protect the battery.

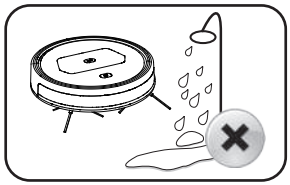

Do not use the device in damp, flammable, explosive or corrosive environments.

Areas of use

The device can be used on the following surfaces:

Wooden floors

Stone floors

Short and medium pile carpets

Plastic floors

Package content

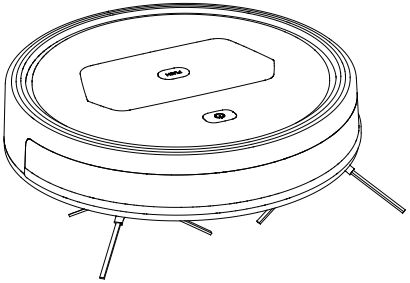

MBOT500 robot vacuum cleaner
- Pre-assembled main brush and side brushes
- Pre-assembled dust bin and filter

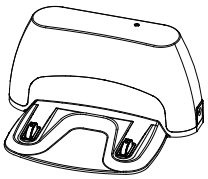

Charging station

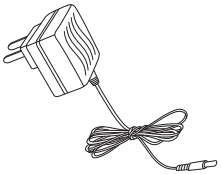

Adapter

Multi-functional remote control

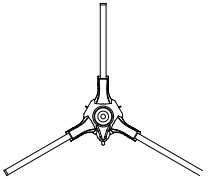

Replacement set of side brushes

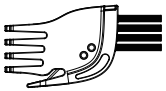

Cleaning brush for cleaning the main brush

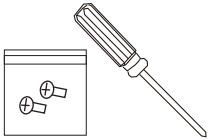

Screwdriver and replacement screws - for loosening/tightening the side brushes

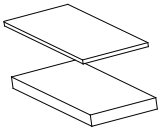

Replacement filter set

Warranty booklet and Quick Guide

04 Product description

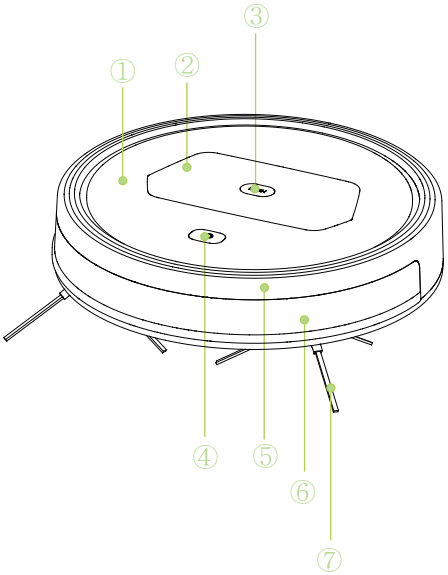

① Upper cover

② Dust Bin

③ Dust bin button

④ Operating button

⑤ Impact strip

⑥ Signal window for obstacle sensors

⑦ Side brushes

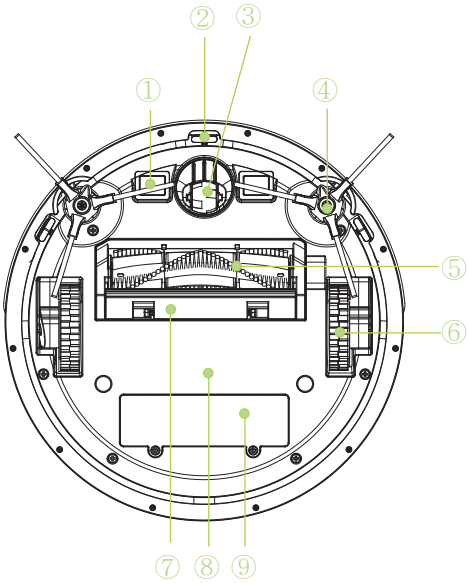

① Charging contact

② Floor sensor / fall sensor

③ Front wheel/castor

④ Side brushes

⑤ Main brush

⑥ Drive wheel

⑦ Cover for main brushes

⑧ Nameplate

⑨ Battery cover

Charging station

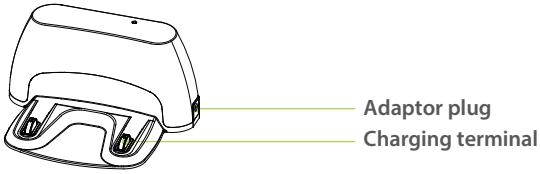

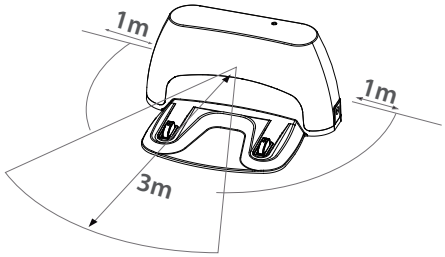

When using the charging station, remember that there should be a min. clearance of 3m at the front and 1m at the sides.

Plug in the mains adaptor. If there is a power connection, the green LED on the top of the charging station is lit.

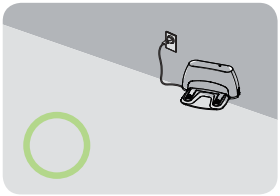

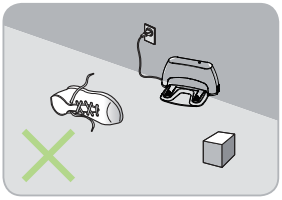

Make sure that there are no loose objects around the charging station.

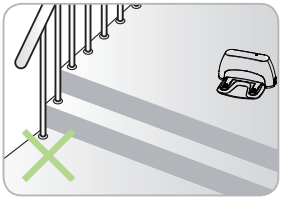

Do not place the charging station next to a down stairway.

Remote control

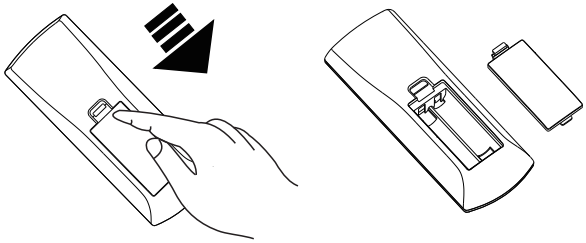

Use the locking lever to remove the battery cover.

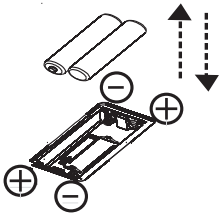

Install the AAA batteries supplied in the correct direction and replace the cover.

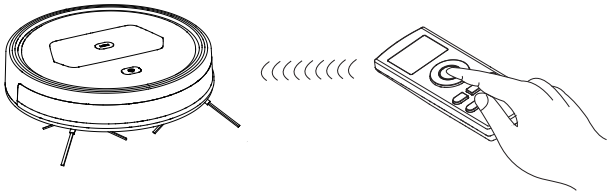

Point the remote control at the robot and press Start/Pause once to test the robot's reaction.
If the robot beeps, a connection has been made.

The remote control's range is 7 metres.

Charging the device

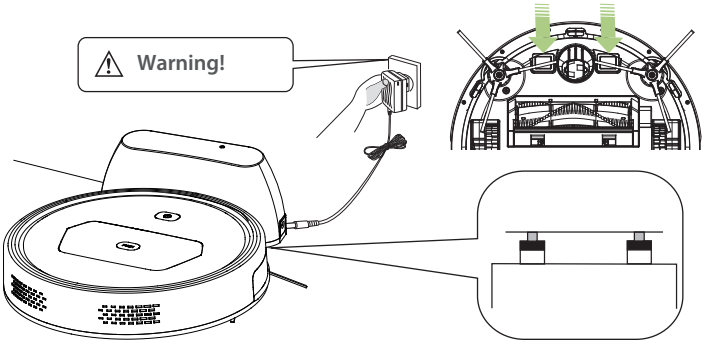

Hold the device with both hands and place it on the charging station. Make sure that the robot's contact is on the charging station. The device beeps after a second and the LED ring lights up as soon as contact is made.

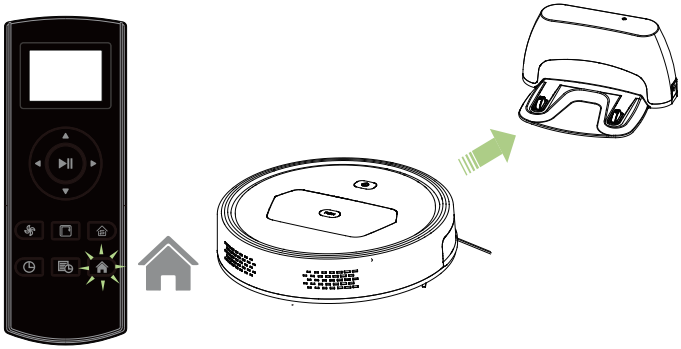

Connect the robot to the remote control (see page 8).
When the device's LED ring is lit, the robot can automatically be found by pressing the home button on the charging station.

LED status	Meaning
flashing red	Battery empty (place on the charging station manually)
red	Error message (see page 20)
flashing green	low battery -> find charging station
pulsing green	charged
Off	Battery fully charged/off

If the battery is completely discharged, this charge will last for around 4-5 hours.

Instructions before operation

Please consider the following points before using the robot vacuum cleaner.

1. **Make sure that the robot vacuum cleaner is not damaged when it is removed from its packaging.**

2. **The device must be fully charged before being used for the first time.**
   See page 9 for further details about charging.

3. **Keep the floor free from loose objects.**
   Before cleaning, please remove any fragile objects or very light or fringed fabrics from the floor, which could affect the movement of the device. Place long rug fringes under the rug.

4. **Emptying the dust bin.**
   The suction capacity is limited when the dust bin is full.
   See page 14 for further details about emptying.

5. **Cleaning the sensors.**
   If the sensors (crash sensors, signal window) or wheel are very dirty, this may cause an error or crash.
   See page 16 for further details about cleaning.

6. **Help children and the elderly.**
   Inform children and the elderly about using the robot so that they are not frightened.

7. **Keep the device away from precipices or falling edges.**
   When objects are present (e.g. shoes on the stairs), an error may be detected and the device may fail. The charging station must be at least 5 metres from falling edges. Never use the device on tables, stools or stairs. The crash sensors must be cleaned regularly.

8. **The device cannot pass over sections over 15mm high.**

9. **Unplug the charging station when it is not in use.**
   If the device is not to be used for a long period of time, please unplug the charging station. This protects the battery.

Remote control & functions

Set current time:

1. ◷ - Press button
2. Set the time with ▲ and ▼
3. Switch between minutes and hours using ▶ and ◀
4. With ◷ - Confirm button
5. Robot beeps once

Set cleaning plan:

1. - Press button
2. Set the time with ▲ and ▼
3. Switch between minutes and hours using ▶ and ◀
4. With - Confirm button
5. Robot beeps once

Disable:

1. - Press button for 2 seconds
2. Robot beeps twice

Suction capacity
Setting:
Step 1: 1x press
Quiet mode
longest operation
Device beeps once
Step 2: 2x presses
Normal mode
Device beeps twice
Step 3: 3x presses
Turbo mode
strongest suction
Device beeps 3 times

Battery low
Change, see page 8.

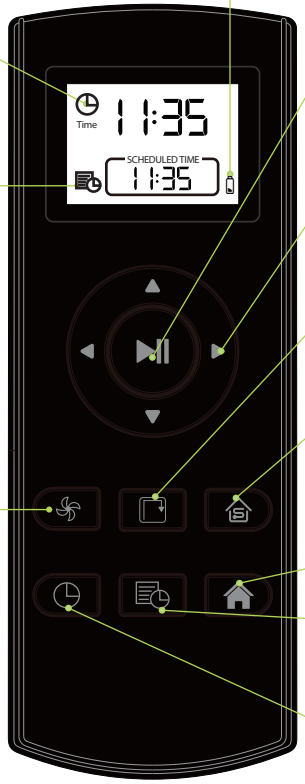

Start/Stop
- Turn robot on
- Start cleaning
- End cleaning
- time setting -> confirm

Direction keys
- Set time
- Control the robot manually
- at ▼, the device only moves backwards gradually

Edge cleaning
- precise cleaning along the walls
- moves to an object and then moves left

30-Min room cleaning
- ideal for small, closed rooms
- after 30 mins, the device stops cleaning and searches for the charging station.

Charging
- the robot searches for the charging station

Cleaning plan
- Set start time for the next automatic cleaning
- Setting: see above

Setting the time
- Current time
- Setting: see above

If the robot no longer responds to the remote control, check the status of the batteries and connect both devices again.
To connect the device, press and hold ▶|| and the robot switches on after 3 seconds. The robot beeps 3 times if the connection is successful.

Start cleaning

1. Turning the device on and off

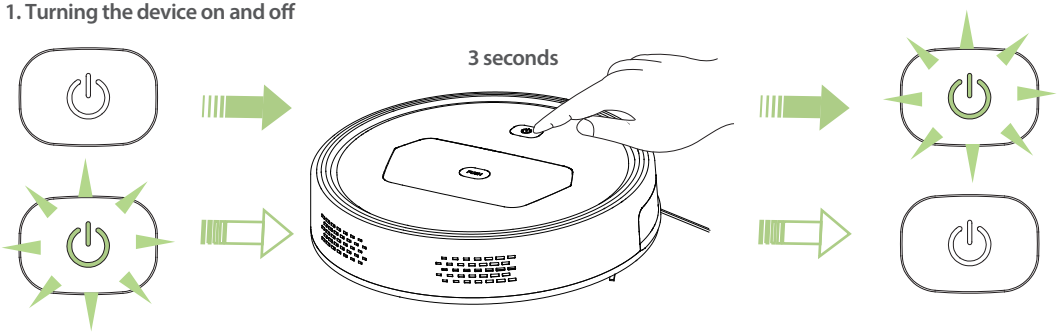

To switch the device on, hold the button for 2 seconds until the device beeps.
As a result, the LED lights up green. The device is in standby mode.t

To switch the device off, hold the button in standby mode for 3 seconds until the device beeps.
The green LED then goes out.

2. Start cleaning

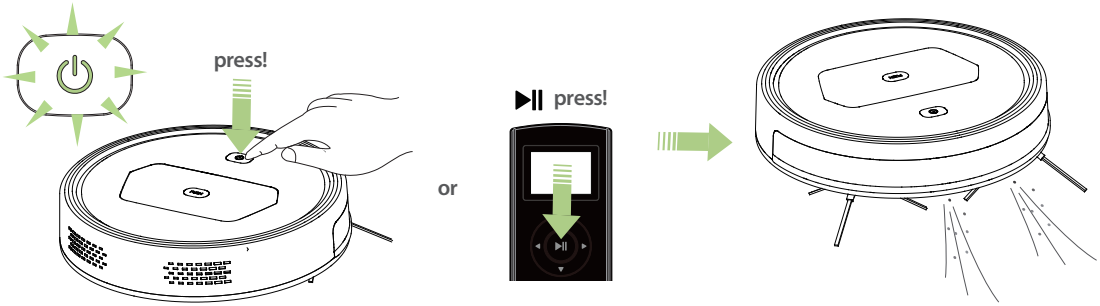

The device operates chaotically, not line-by-line. An area of up to 150 m^2 can be cleaned with one charge.

End cleaning

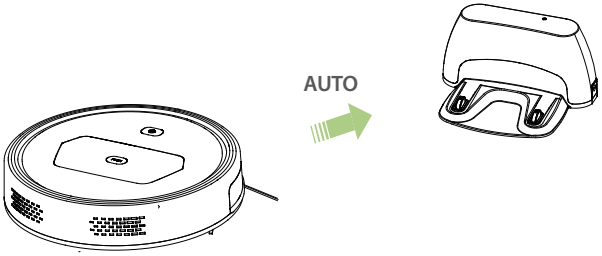

When the battery is low, the robot automatically searches for its charging station.
It performs certain movements repeatedly until it finds the charging station's signal.
Its status can be recognised by the flashing LED ring and the deactivated suction motor.

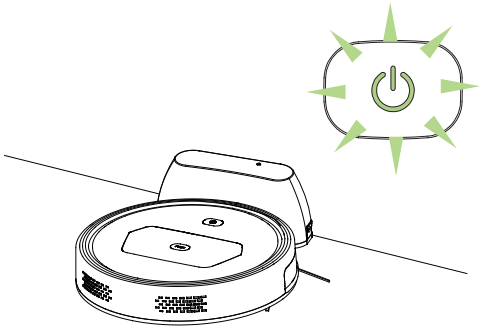

If the robot is docked correctly, it beeps once and the charging process begins.
The LED flashes green.

During operation, if you press button ⏻ on the robot or the Start/Stop button ▶II on the remote control, the cleaning programme ends.

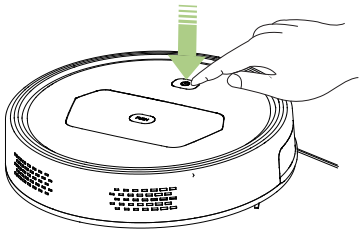

or

The robot make take a long time to or not be able to find its charging station.
This often means it is in a complex environment or the battery is empty.

12 Cleaning the dust bin

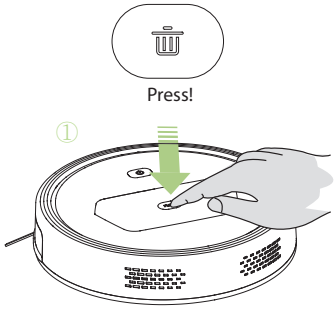

Press the dust bin button to release.

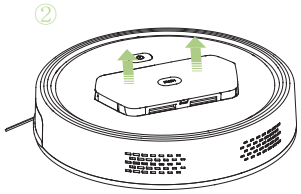

The dust bin springs up by a few millimetres so it can be easily removed.

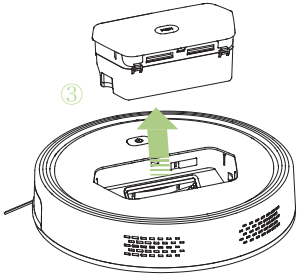

Pull the dust bin up from the housing.

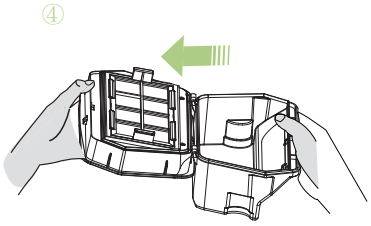

Flip the lid of the dust bin open and empty the bin.

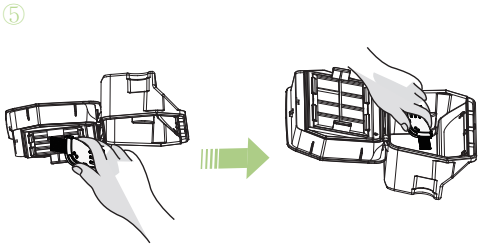

Use the cleaning brush supplied to remove any dirt from the dust bin and the filter.

The transparent part of the dust bin can be separated from the upper section and rinsed in cold water. Please dry thoroughly before using again.

13 Cleaning the dust filter

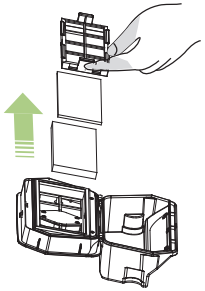

Remove the filter cover by pulling the top of the dust bin upward.

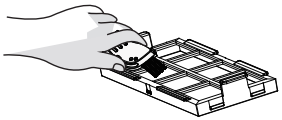

Remove any dirt from the filter cover using the cleaning brush supplied.

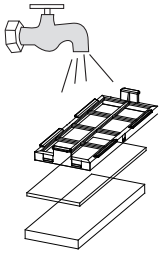

The filter cover as well as the fine particle filter and the filter sponge can be cleaned in cold water.

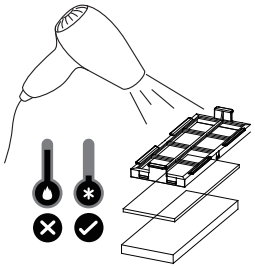

To speed up the drying process, the filter parts can be blown with cold air.

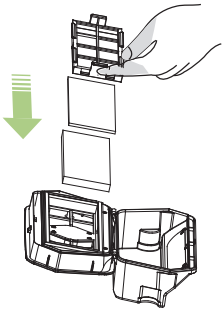

Replace the filter parts and press down on the filter cover.

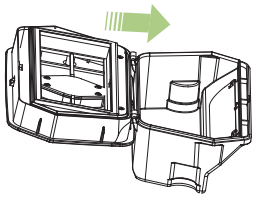

Clip the dust bin firmly together.

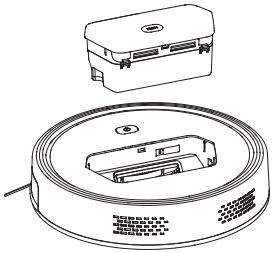

Return the dust bin to the device.

14 Cleaning the sensors and wheels

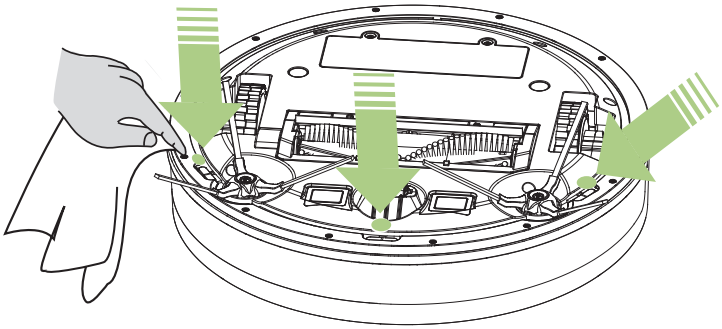

Clean the three floor sensors with the cleaning brush supplied or with a cotton bud.

- If the sensors are very dirty, you can use a moistened cotton bud.
- Do not use too much moisture.
- Never use alcohol or thinner.

Clean the front wheel and the drive wheels with the cleaning brush supplied.

- If the front wheel is stuck, you can pull it upwards to remove any internal dirt.
- Remove any hair and dirt collected.

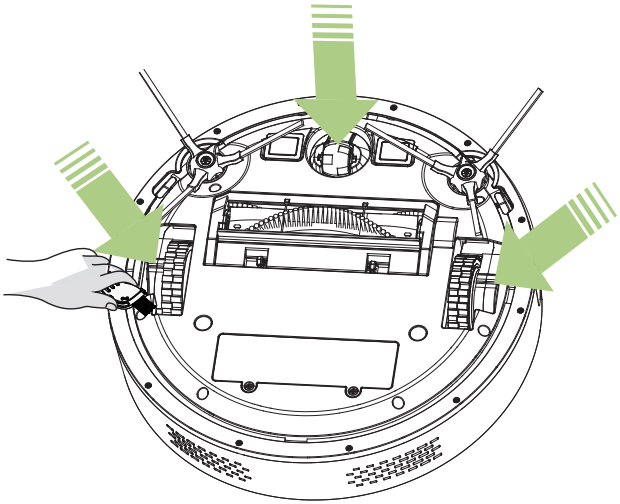

Cleaning the main brush

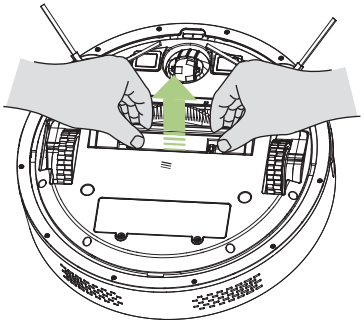

Press the brush cover's release lever in and pull the brush upward.

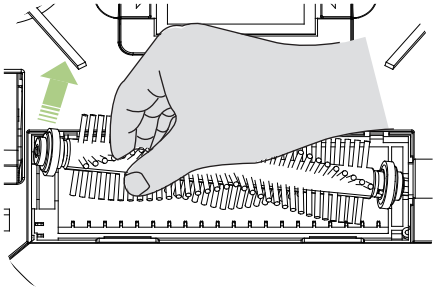

Lift the main brush on the left side to remove it from its mount.

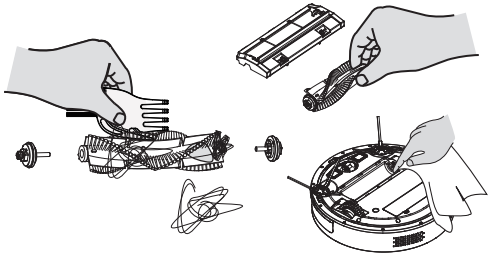

Remove any hair collected using the fine blade on the cleaning brush supplied.
Coarse dirt can be removed using the comb of the cleaning brush.

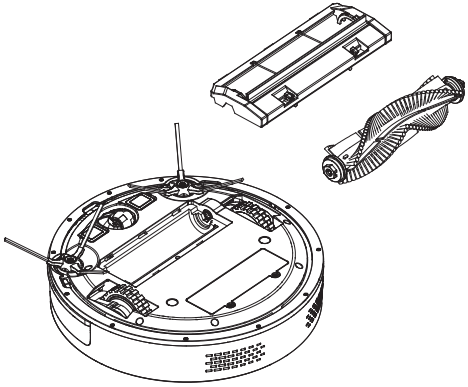

First insert the main brush with the square on the right side.
Replace the cover correctly.

16

Cleaning the side brushes

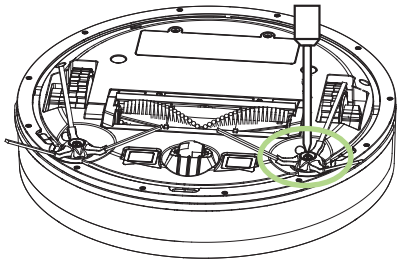

Remove the screws from the side brushes with the screwdriver provided and pull the side brushes upwards.

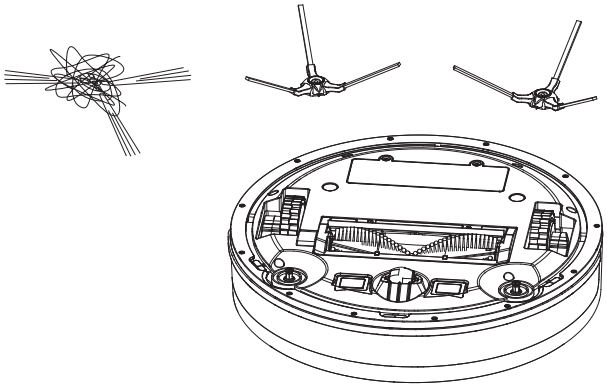

Remove any hair and dirt collected and replace the side brushes and tighten them. Right and left do not matter.

17

Storage/Battery change

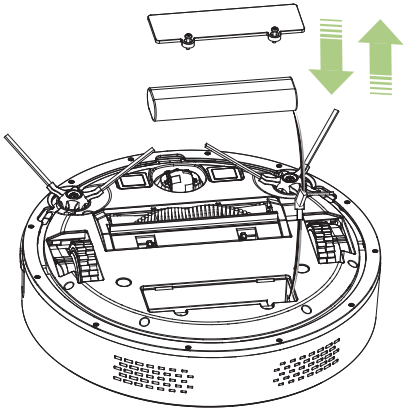

if you are not using the robot for a long period of time, please remove the battery to extend its life.

Remove the battery cover using the screwdriver supplied.

Remove the battery by disconnecting the cable. Make sure that the cable does not slip into the housing.

Cleaning the charging contact

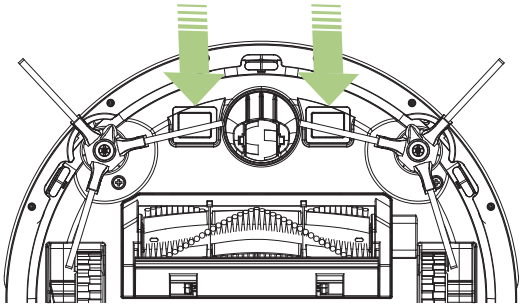

If the device experiences problems when docking on the charging station, please check the charging contact on the bottom of the robot. If this is very dirty, no contact can be made with the charging station.

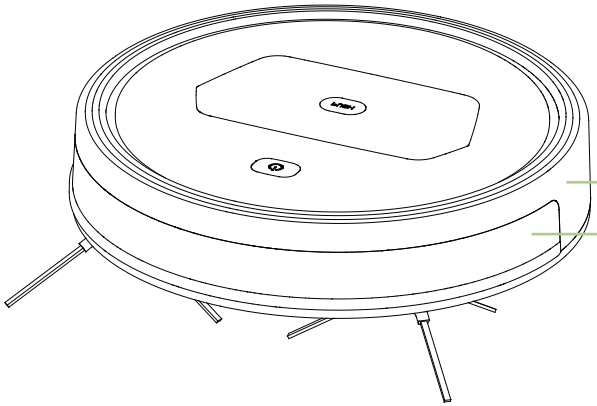

To guarantee full functionality, please clean the impact strip and the signal window regularly.

Troubleshooting

- The robot vacuum cleaner gives out a combination of LED colours and beeps to inform you of the issue/error concerned.

- First try solving the issue using the suggestions below.

- If the proposed solutions are unsuccessful, please contact customer services.

- The error message beeps 10 times 3 seconds apart.

LED red 1x beep	Cause	Drive wheel (left/right) is not working or is overloaded.
	Solution	Check if the wheels are clogged by dirt or hair.
LED red 2x beep	Cause	Side brush (left/right) is not working or is overloaded.
	Solution	Check if the side brushes are clogged by dirt, hair or the cable.
LED red 3x beep	Cause	Main brush is not working or is overloaded.
	Solution	Check if the main brush are clogged by dirt or hair or the cable.
LED red 4x beep	Cause	Impact strip stuck or impact sensor defective.
	Solution	Check whether the impact strip flexes normally or is stuck.
LED red 5x beep	Cause	Front wheel/castor not moving.
	Solution	Check whether the front wheel can rotate freely.
LED flashes red 1x beep	Cause	Floor/crash sensors defective or dirty.
	Solution	Check whether the device is already on the floor or if the floor sensors are dirty.
LED flashes red 2x beep	Cause	Battery level too low.
	Solution	Place the device in the charging station manually.
LED flashes red 3x beep	Cause	System error.
	Solution	Place the device in a different location and try again.
LED flashes red 4x beep	Cause	The vacuum motor is not working or the device has no suction.
	Solution	Clean the main brush and try again.
LED flashes red 5x beep	Cause	Obstacle sensors are blind.
	Solution	Check whether the impact strip's signal window is very dirty.
LED flashes red 6x beep	Cause	The dust bin is not inserted.
	Solution	Insert the dust bin correctly.

Technical specifications

Operating voltage	14,8 V ⎓
Rated output	24 W
Battery	Li-Ion, 2600mAh 14,4 V
Charging time	4-5 Std.
Working time	up to 90 mins
Scope	-20°C bis +50°C, < 80 % RH
Volume	< 65 dB
Weight	3,5 kg
Dimensions	Ø 326 x 82 mm

Adapter	
Output voltage	19 V ⎓
Output current	600mA ⎓
Charging station	
Input voltage	19 V ⎓
Remote control	
Signal range	7 Meter
Battery	2x AAA

M

BOT

MONEUAL®

Customer service

support@moneual.de

Before contacting customer services, please make sure you have the following information available:

- Model
- Problem
- Serial number
- Address and phone number
- Retailer name

MONEUAL®

www.moneual.de